MODEL
EGAS100HLP

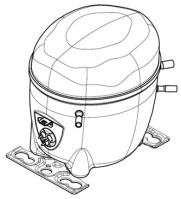

APPROVALS

ENGINEERING CODE
513701367

APPROVED REFRIGERANT
R-134a

POWER SUPPLY
220-240 V 50 Hz

STANDARD CONDITIONS
ASHRAE

APPLICATION
LBP

COOLING CAPACITY
242 W (LBP)

EFFICIENCY
1.52 W/W (LBP)

MOTOR TYPE
RSIR

STARTING TORQUE
LST

DATA

General Data

Type	Hermetic reciprocating
Technology Type	On-Off
Displacement	7.95 cm^3
Compressor Cooling	Static/NotControled/220
Expansion Device	Capillary Tube
Horse Power	1/3 hp
Power Supply	220-240 V 50 Hz
Evaporating Temperature Range	-35 °C to -15 °C

Electrical Data

Motor type	RSIR
Starting Torque	LST
Start Winding Resistance	29.83 Ω at 25° C
Run Winding Resistance	15.65 Ω at 25° C
Locked Rotor Amperage (LRA)	6.8 A
Rated Load Amperage (RLA) at 50 Hz	1.15 A
Rated Load Amperage (RLA) at 60 Hz	1.1 A

Mechanical Data

Oil Charge	230 ml
Oil Type Configuration	ESTER
Oil Type Viscosity	ISO10
Weight	10.99 Kg

Electrical Components

	Description
Starting Device	PTC | 7M220MC1 8EA17C1 8M220MC1 QPS2-A22MG1 QPS2-A22MG1 092
Motor Protection	4TM232RFBYY-53

External Characteristics

Tray Holder	No

Connector	Internal Diameter	Shape
Suction	8.2 mm	Slanted/Copper
Discharge	6.5 mm	Slanted/Copper
Process	6.5 mm	Slanted/Copper

PERFORMANCE

Rated Points

Condensing Temperature	Evaporating Temperature	Cooling Capacity	Power Consumption	Current	Gas Flow Rate	Efficiency
54.40°C	-23.30°C	242 W	160 W	1.15 A	4.70 kg/h	1.52 W/W

Test Condition: ASHRAELBP32, Static/NotControled/220, Return Gas 32.2°C, Evaporation -23.30°C, Condensing 54.40°C, Ambient 32.2°C , Liquid 32.2°C, Subcooling 22.2K. Data in accordance to EN 12900:2013 and AHRI 540:2015 polynomial equation and uncertainty guidance.

Performance Curve Data

Condensing Temperature 35°C

Evaporating Temperature °C	Cooling Capacity W	Power W	Current A	Gas Flow Rate kg/h	Efficiency W/W
-35	141	110	1.05	2.72	1.28
-30	184	122	1.07	3.56	1.51
-25	239	135	1.1	4.63	1.77
-20	307	150	1.14	5.97	2.05
-15	391	166	1.18	7.62	2.35
-10	492	183	1.24	9.62	2.69

Test Condition: ASHRAELBP32, Static/NotControled/220, Return Gas 32.2°C, Ambient 32.2°C , Liquid 32.2°C. Data in accordance to EN 12900:2013 and AHRI 540:2015 polynomial equation and uncertainty guidance.

Condensing Temperature 45°C

Evaporating Temperature °C	Cooling Capacity W	Power W	Current A	Gas Flow Rate kg/h	Efficiency W/W
-35	134	111	1.05	2.58	1.2
-30	178	127	1.07	3.45	1.4
-25	233	145	1.11	4.52	1.6
-20	301	165	1.16	5.84	1.82
-15	382	186	1.22	7.44	2.06
-10	479	208	1.29	9.38	2.31

Test Condition: ASHRAELBP32, Static/NotControled/220, Return Gas 32.2°C, Ambient 32.2°C , Liquid 32.2°C. Data in accordance to EN 12900:2013 and AHRI 540:2015 polynomial equation and uncertainty guidance.

Condensing Temperature 55°C

Evaporating Temperature °C	Cooling Capacity W	Power W	Current A	Gas Flow Rate kg/h	Efficiency W/W
-35	116	108	1.04	2.25	1.08
-30	164	129	1.08	3.17	1.27
-25	220	152	1.13	4.26	1.45
-20	287	176	1.2	5.57	1.63
-15	367	202	1.28	7.15	1.82
-10	461	229	1.37	9.02	2.02

Test Condition: ASHRAELBP32, Static/NotControled/220, Return Gas 32.2°C, Ambient 32.2°C , Liquid 32.2°C. Data in accordance to EN 12900:2013 and AHRI 540:2015 polynomial equation and uncertainty guidance.

Operating Envelope

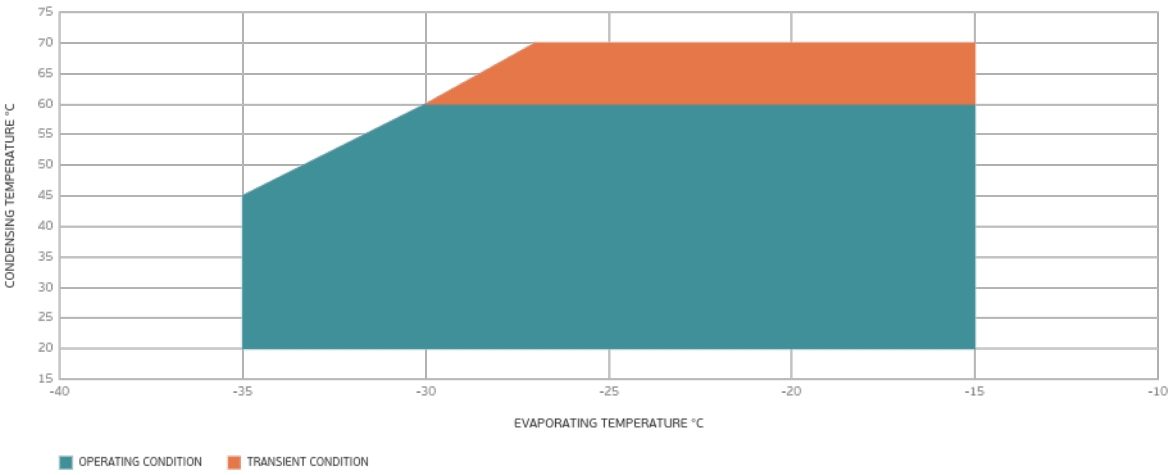
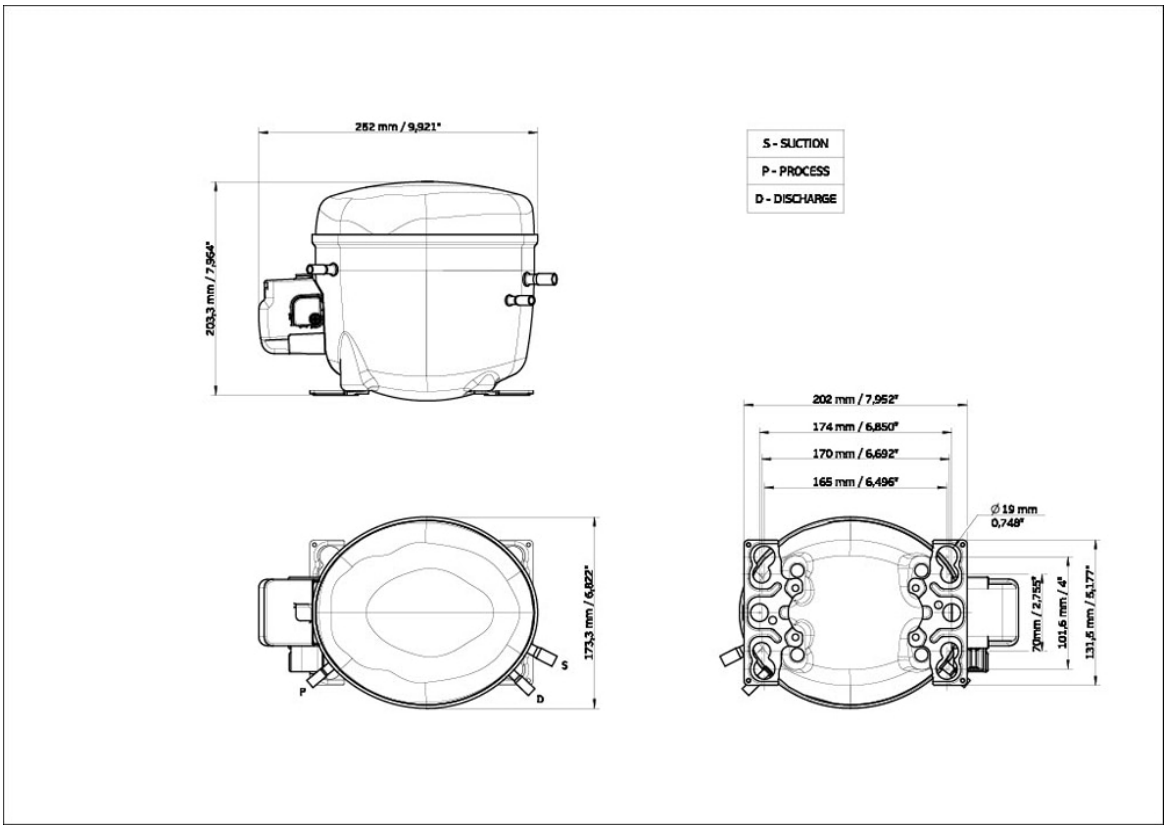
External Dimensions